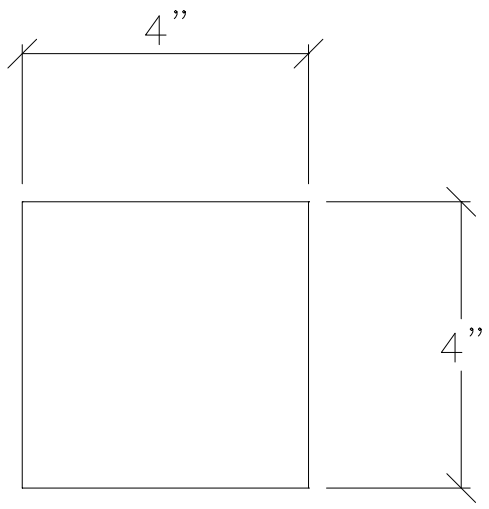

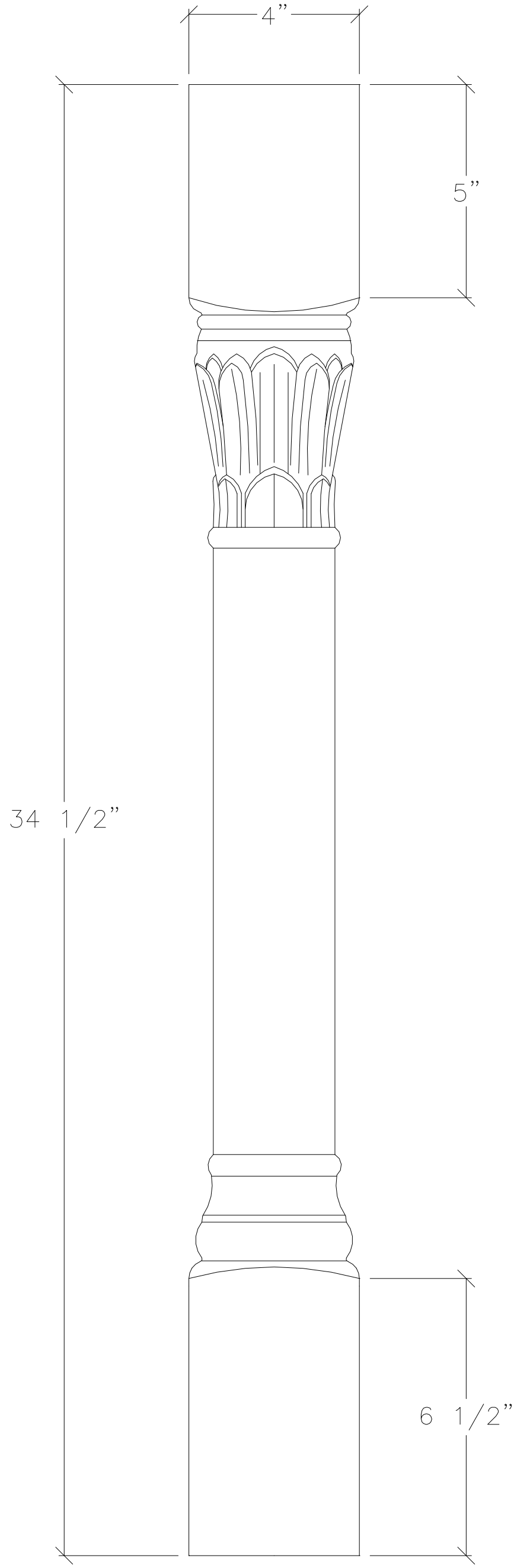

ART FOR EVERYDAY™

PRODUCT CODE: POST-K2