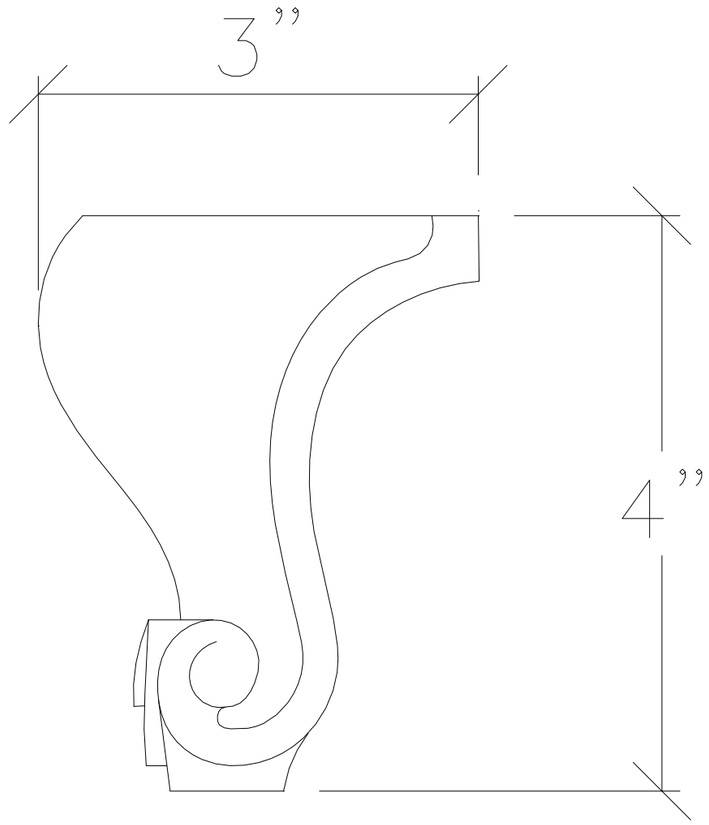

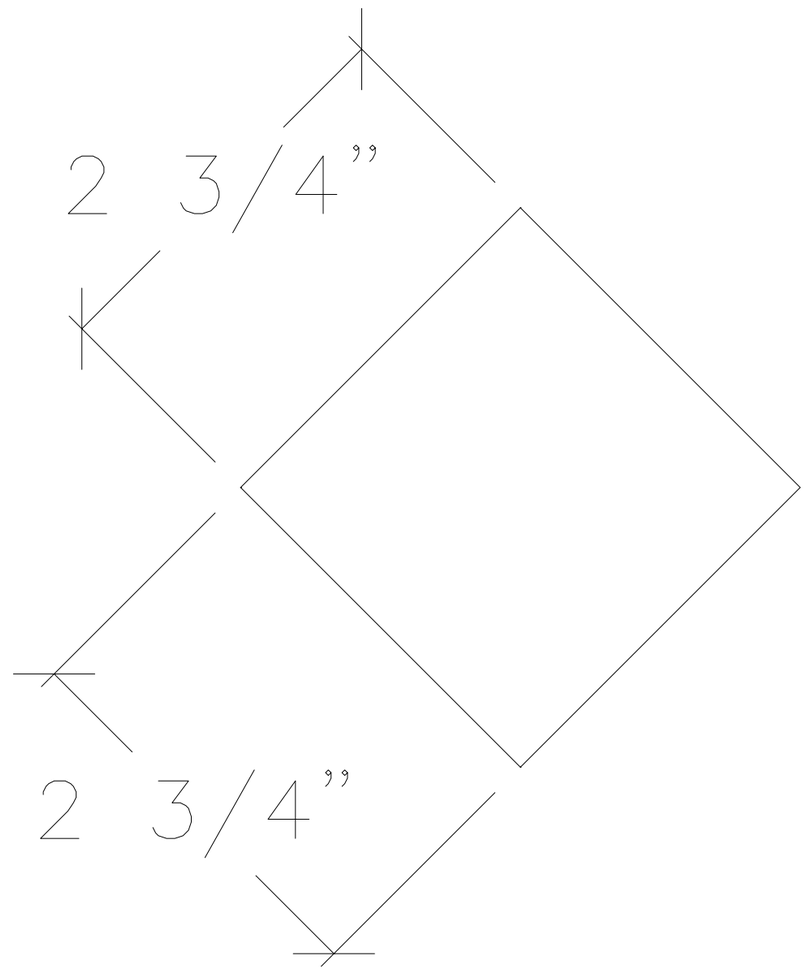

ART FOR EVERYDAY™

PRODUCT CODE: Q-LEG4