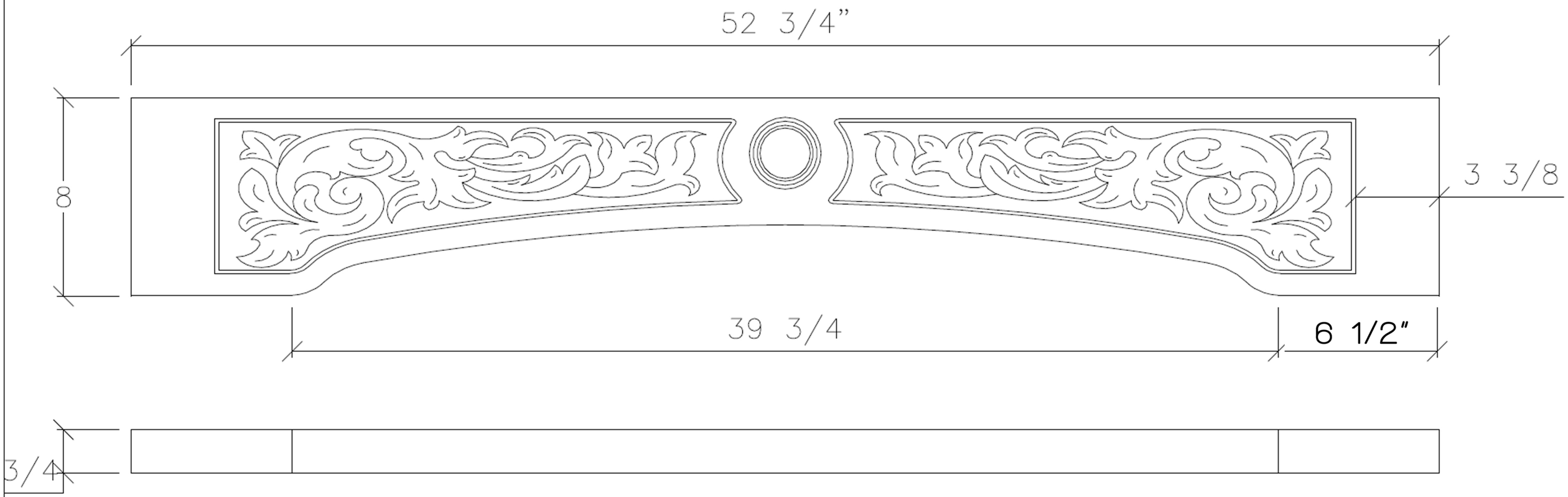

ART FOR EVERYDAY™

PRODUCT CODE: MTL-FAL3