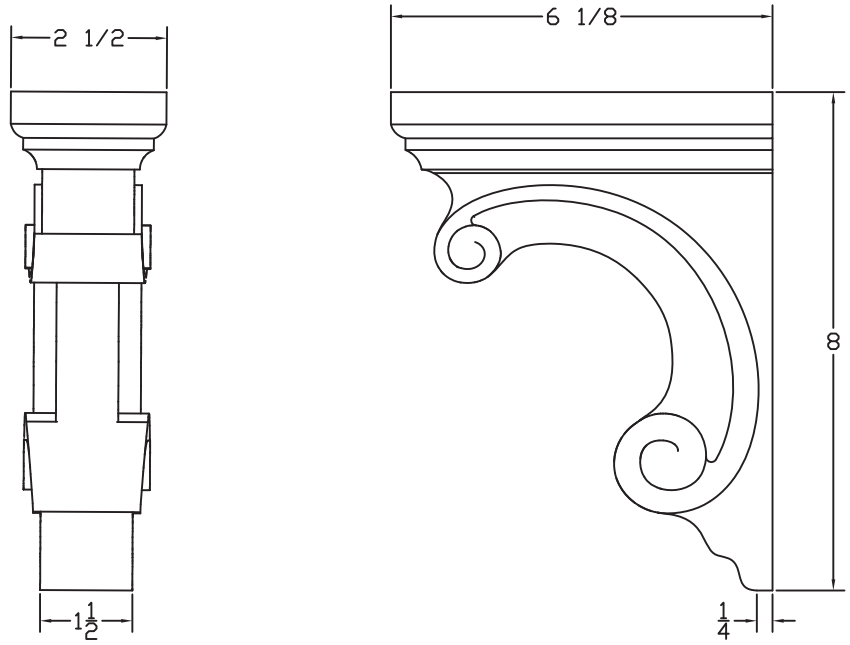

	ART FOR EVERYDAY™
PRODUCT CODE: CBL-PRV2	